OUTDOOR DUAL TECHNOLOGY DETECTOR

XC-1XT ANIMAL Immune (80 lbs.)

INSTALLATION INSTRUCTIONS

ALEPH®

1. SPECIFICATIONS

Power Requirement	9.5 to 16VDC (Normal 12VDC)
Current Draw	35mA max.
PIR Detector	Dual-Element
PIR Detection Range	Standard – 40 × 56 ft
	Long range lens – 80 × 8 ft (option)
PIR Sensitivity Adjustment	Selectable (60 or 80 or 100 or 120%)
PIR Pulse Count	Selectable (2 or 4 pulses)
MW Detector	MIC Module (10.525GHz)
MW Range Adjustment	Volume Adjustment
MW Detection Range	20ft to 66ft (6m to 20m)
MW Pulse Count	2 pulses
Warm-up Period	50±15 sec
Alarm Period	2±0.4 sec
Alarm Display	Red LED monitor (ON/OFF selectable)
PIR Detection Display	Green LED ON
MW Detection Display	Orange LED ON
Relay Output	2C Contact (N.C/N.O) 30VDC 0.35A max.
Tamper Contact	N.C dry contact 30VDC 0.5A max.
Operating Temperature	−15°F to +122°F (−26℃ to +50℃)
Environment Humidity	95% max.
Dimensions(H × W × D)	6.3in. × 2.76in. × 1.73in. (160mm × 70mm × 43.9mm)
Weight	6.3oz(180g)

We may change specification and design without prior notice as part of its continuing program of product improvement.

2. DETECTION PATTERN

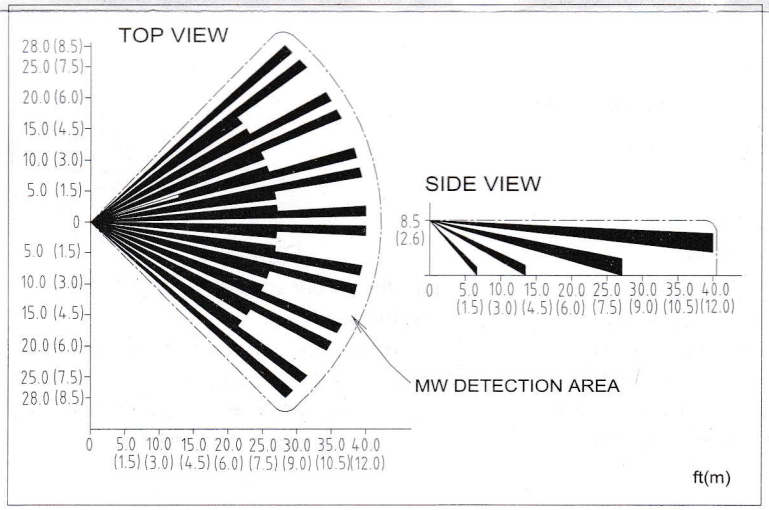

3. DESCRIPTION

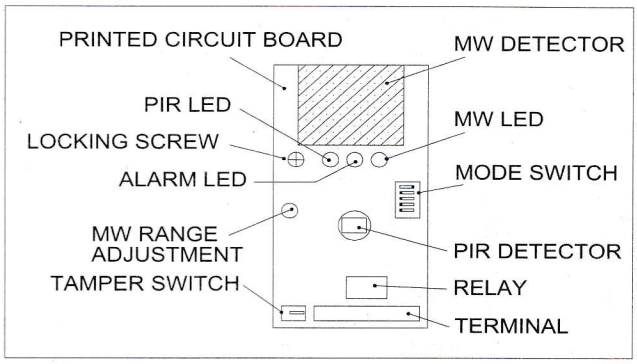

4. DIMENSIONS

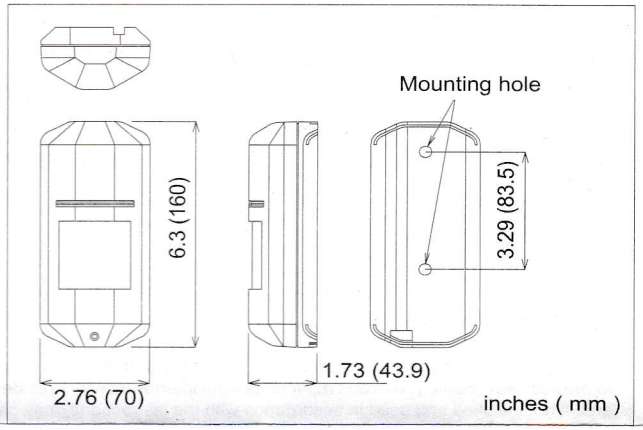

5. MODE SWITCH

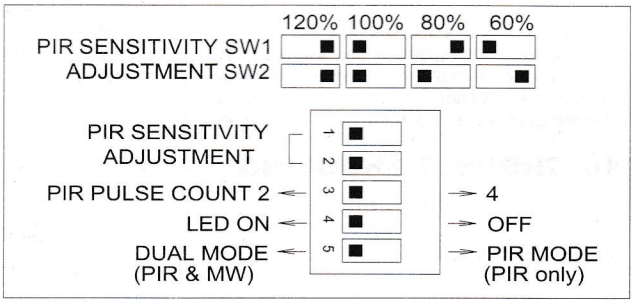

6. MW Range Adjustment

MW range adjustment is provided allowing use in difficult environments.
MAX:Increases
MIN :Decreases

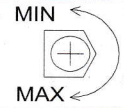

7. INSTALLATION HINTS

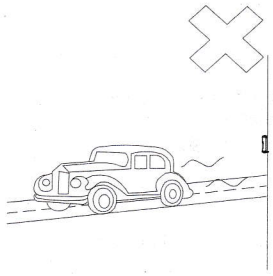

Do not install facing heavy vehicle traffic.

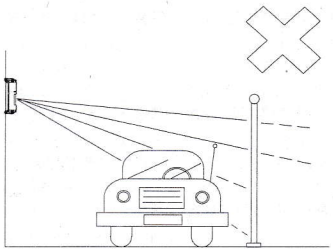

Do not limit a desired detection zone by interference of car, screen, potted plants, etc.

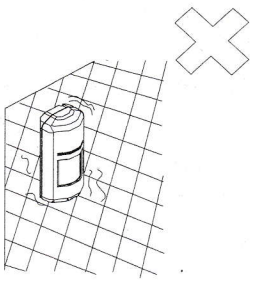

Mount the unit only on a solid location or surface.

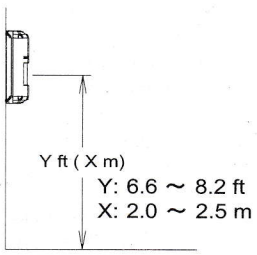

Unit installed height should be Y ft (X m) from floor so that the full coverage could be achieved.